Distributed Real-Time Control Systems

Master's in Electrical and Computer Engineering

Final Report — Distributed Cooperative Illumination Control

Author: João Rocha `ist1106509`

Author: Ricardo Gaspar `ist1104180`

Author: Diogo Costa `ist1102632`

Instituto Superior Técnico – April 12, 2026

1 Introduction

This report presents the distributed cooperative illumination system developed in Phase 2. Three smart luminaires communicate over CAN-BUS, automatically calibrate a linear model at start-up, and run distributed optimisation algorithms to minimise energy while maintaining desk illuminance above occupancy-dependent lower bounds. Compared with the local PI controller of Phase 1, this stage adds inter-node communication, cooperative decision-making, and a hub interface for PC control. Since each luminaire affects not only its own desk but also neighbouring desks through cross-coupling, the control problem is coupled and must be solved cooperatively.

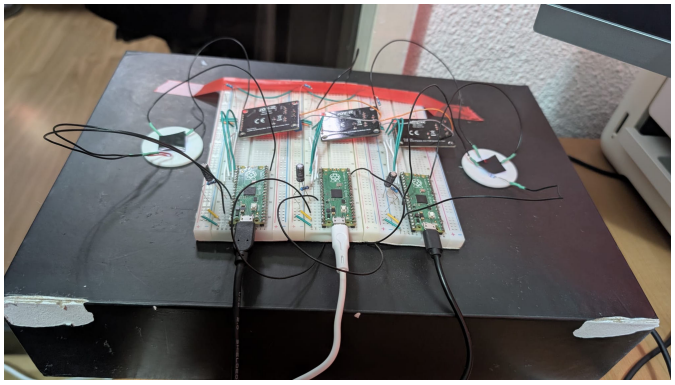

Figure 1: Top view: Pico boards, MCP2515 modules, LDR sensors on 3D-printed mounts.

2 System Architecture

Each node comprises an RP2040 Pico, an LED driven by 12-bit PWM (0–4095), an LDR-based luxmeter with a voltage-divider circuit (10 kΩ fixed resistor), and an MCP2515 CAN controller interfaced via SPI at 10 MHz. The MCP2515 modules use 16 MHz crystals and are powered at 5 V from the Pico VBUS pin; a common ground between all modules is essential. LEDs and sensors are mounted in 3D-printed fixtures that minimise external light seepage into the measurement area.

Figure 2: Interior: three LEDs in 3D-printed ceiling fixtures; white walls provide diffuse reflection.

The RP2040 dual-core architecture separates concerns (Figure 3): Core 0 runs the 100 Hz PI loop, distributed algorithms, serial/hub interface, and calibration; Core 1 handles MCP2515 SPI exclusively, preventing bus contention.

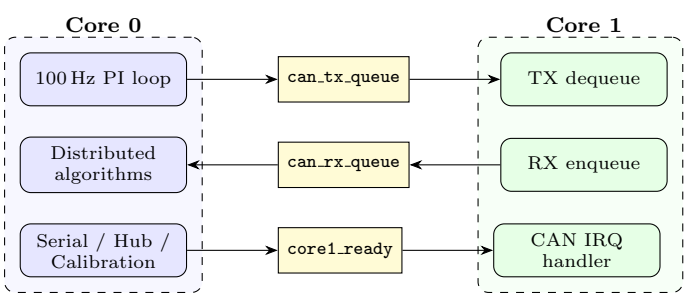

Figure 3: Dual-core architecture. Cores communicate via lock-free Pico SDK queues.

This separation bounds CAN interrupt latency independently of control-loop computation time. Any USB-connected node acts as a hub, translating serial commands to CAN and routing replies back, allowing the complete network to be operated from a single terminal.

3 CAN-BUS Communication

The CAN bus operates at 500 kbps with standard 11-bit identifiers, terminated with 120 Ω resistors. The ID encodes message type plus sender/target: `CAN_ID` = `BASE` + `node_id`. Lower IDs win arbitration, so management traffic (Hello, 0x100) always preempts algorithm data (0x700+). Broadcasts use address `0x7F`. Table 1 lists all ten message types.

Table 1: CAN message types and identifiers.

Base ID	Type	Direction	Payload
`0x100`	Hello	Broadcast	Heartbeat, peer discovery
`0x300`	Command	Unicast/Bcast	Duty, ref, occupancy, cost
`0x400`	Calibration	Broadcast	Plan params, slot sync
`0x500`	Query	Unicast	Request metric from peer
`0x580`	Reply	Unicast	Response to query
`0x600`	Stream	Broadcast	Real-time lux/duty/ref
`0x680`	Gain Exch.	Broadcast	K row, L_{ref}, cost
`0x700`	Consensus	Broadcast	Duty proposals
`0x780`	ADMM	Broadcast	z_i, u_i, d_i
`0x7C0`	Dual Dec.	Broadcast	d_i, λ_i

4 Calibration

At power-on, all nodes enter a discovery phase where they broadcast SYN frames and reply with ACK. A node exits wakeup only after the 5-second window expires, guaranteeing full reachability (Figure 4). The coordinator (lowest node ID) then broadcasts the calibration plan.

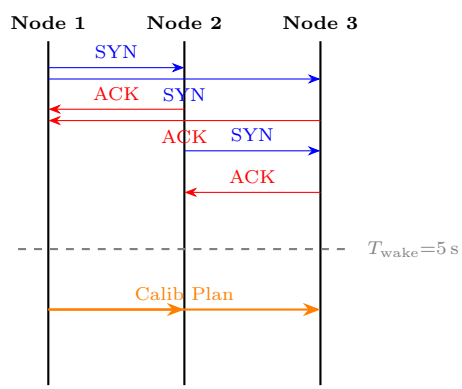

Figure 4: Wake-up and calibration trigger sequence.

The system model is $\mathbf{L} = \mathbf{K}\mathbf{d} + \mathbf{o}$, where $\mathbf{K}$ is the gain matrix and $\mathbf{o}$ the background. Calibration measures these via round-robin: baseline (all LEDs off), then each LED at 50% duty while all sensors record, yielding $K_{ji} = (L_j^{(i)} - o_j)/d_{\text{cal}}$. The state machine (Figure 5) completes in ∼4150 ms.

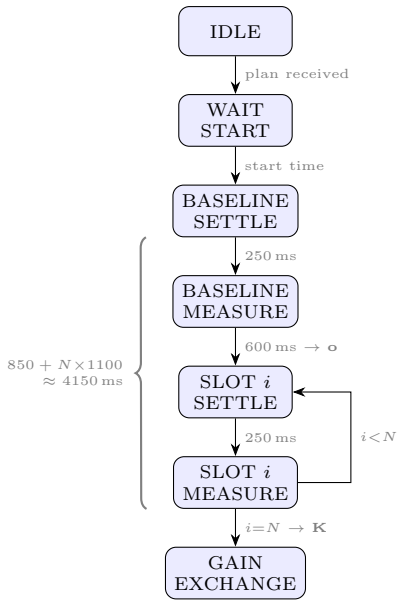

Figure 5: Calibration state machine.

Model validation (Figure 6) confirms linearity with $R^2 = 0.977$, 0.990, 0.993 for nodes 1–3. The measured $\mathbf{K}$ and $\mathbf{o}$ are in Table 2. The diagonal elements are dominant, confirming each LED primarily lights its own desk. Off-diagonal coupling is moderate between adjacent nodes (K_{12}=12.53, K_{23}=11.66) but weak for non-adjacent pairs (K_{31}=1.31).

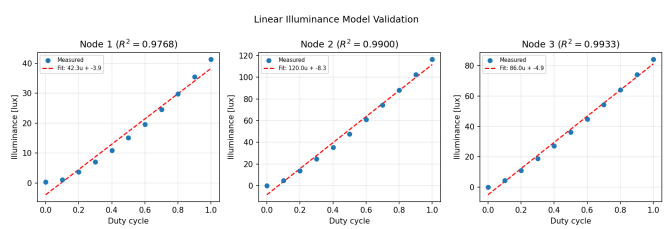

Figure 6: Model validation: lux vs. duty with linear fit and R^2.

Table 2: Gain matrix $\mathbf{K}$ (lux/duty) and background $\mathbf{o}$ (lux).

	Node 1	Node 2	Node 3	o_i
Node 1	29.50	12.53	4.03	0.32
Node 2	4.01	95.04	11.66	0.23
Node 3	1.31	9.09	72.23	0.03

5 Local Controller

Each node runs a discrete PI controller with feedforward at 100 Hz (10 ms period). The feedforward term $u_{\text{ff}} = (L_{\text{ref}} - o_i)/K_{ii}$ inverts the calibrated model to provide an immediate open-loop duty estimate, enabling single-cycle reference tracking. The PI component (K_p=0.5, K_i=0.3) corrects residual errors from model mismatch and external disturbances. Back-calculation anti-windup prevents integrator saturation when the duty cycle is clamped at 0 or 1.

6 Distributed Algorithms

The optimisation problem minimises total weighted energy $\sum c_i d_i$ subject to illuminance constraints $\mathbf{Kd} + \mathbf{o} \geq \mathbf{L}_{\text{ref}}$ and duty bounds $0 \leq d_i \leq 1$, where c_i is the cost coefficient for luminaire i. Three distributed algorithms were implemented and compared against the local PI baseline:

Consensus ADMM. Each node i solves $\min c_i d_i + (\rho/2)(d_i - \bar{d}_i)^2$ subject to all N illuminance constraints, checking that its proposed duty satisfies not only its own constraint but also the constraints of all peers. Proposals are exchanged via CAN and averaged until convergence (ρ=2.0, $k_{\max}$=50).

ADMM. The Alternating Direction Method of Multipliers decomposes into a primal update $d_i = z_i - u_i - c_i/\rho$, a feasibility projection $\mathbf{z} = \Pi_{\mathcal{C}}(\mathbf{d} + \mathbf{u})$ via iterative Dykstra projections, and a dual update $u_i \mathrel{+}= d_i - z_i$ (ρ=1.0).

Dual Decomposition. Lagrangian relaxation with subgradient ascent on the dual variables. The step size α_0=0.05 decays geometrically (factor 0.995) to ensure convergence.

7 Results

7.1 Algorithm Comparison

Three metrics are computed at each 10 ms cycle: *energy* (accumulated power×time), *visibility error* (average illuminance deficit below reference), and *flicker* (duty-cycle direction reversals). A dedicated `RM` command resets all accumulators, enabling fair per-algorithm comparison.

All four algorithms were tested with equal costs c=[1, 1, 1], L_{ref}=20 lux, and metrics reset before each 20-second window. All converge to the same operating point (Table 3), confirming the unique feasible minimum. Visibility error is below 0.026 lux and flicker is zero in steady state, with total energy ∼28.3 J. Consensus proved most robust during testing; ADMM and dual decomposition showed sensitivity to rapid algorithm switching.

Table 3: Algorithm comparison, equal costs (20 s window).

Algorithm	Duty cycle N1	Duty cycle N2	Duty cycle N3	Energy [J] N1	Energy [J] N2	Energy [J] N3	Vis. err (max)
PI Only	0.511	0.168	0.267	12.73	5.32	10.22	0.025
Consensus	0.520	0.169	0.268	12.88	5.30	10.23	0.024
ADMM	0.527	0.169	0.269	13.14	5.31	10.27	0.026
Dual Dec.	0.516	0.170	0.269	13.14	5.32	10.23	0.024

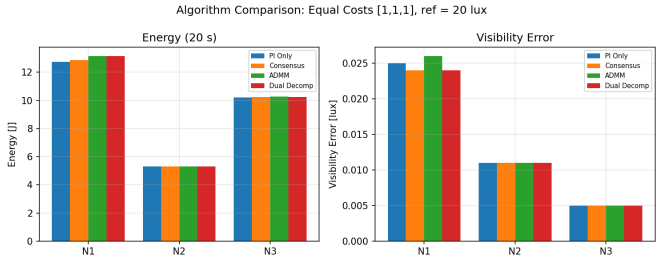

Figure 7: Energy and visibility error across algorithms.

7.2 Unequal Costs

With c=[1, 2, 3], the consensus algorithm should shift duty towards the cheapest node. However, cross-coupling gains are 7–70× weaker than self-gains (e.g., $K_{21}/K_{22} = 0.042$), so each node must provide most of its own illuminance. The resulting duty change is marginal (<2%, Table 4)—a physical limitation of the box geometry, not an algorithm deficiency.

Table 4: Duty: equal vs. unequal costs (Consensus).

Cost setting	N1	N2	N3
Equal [1, 1, 1]	0.520	0.169	0.268
Unequal [1, 2, 3]	0.530	0.168	0.270

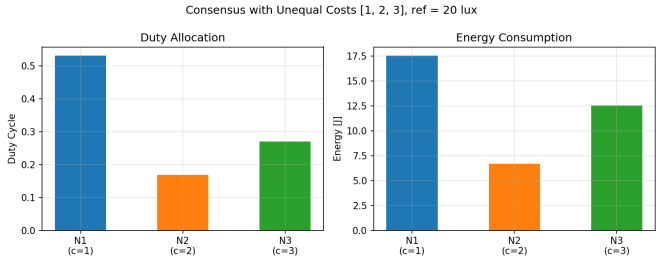

Figure 8: Consensus duty and energy with c=[1, 2, 3].

7.3 Step Response and Occupancy

Figure 9 shows Node 1's response to a 5→25 lux reference step. The feedforward term provides an immediate duty jump; the measured illuminance reaches the target within the first control cycle (∼10 ms). Figure 10 shows occupancy-driven transitions (LOW→HIGH→LOW), tracked with the same single-cycle speed.

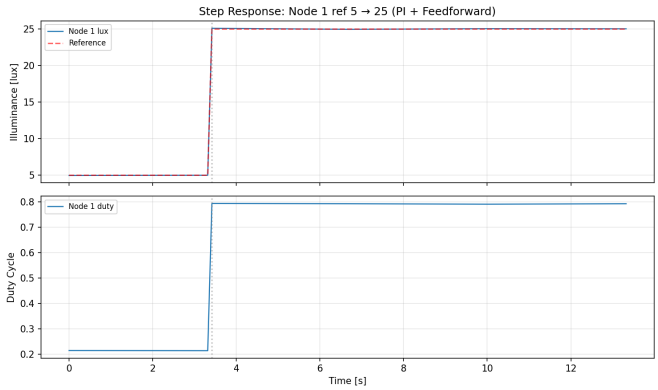

Figure 9: Step response: Node 1 ref 5 → 25 lux.

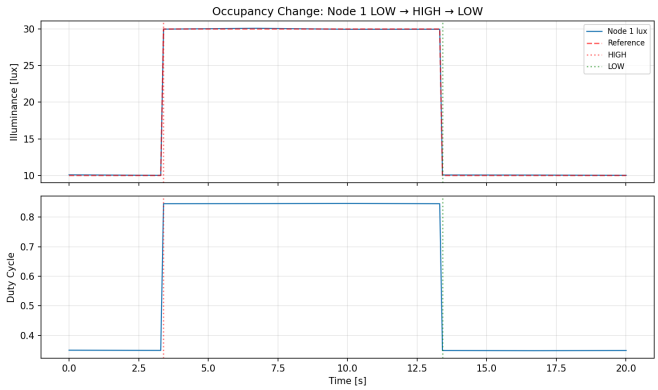

Figure 10: Occupancy change: Node 1 LOW → HIGH → LOW.

7.4 Disturbance Rejection

Two disturbance tests were performed. In the physical test (Figure 11), opening and closing the box lid causes light to escape; all three nodes maintain 20 lux within 1 lux throughout. In the programmatic test (Figure 12), Node 2's duty was forced to 0.8 open-loop. Node 2's cross-illumination raises Node 1's lux, so Node 1's PI controller reduces duty from 0.52 to 0.15 (70% reduction) to maintain the target. When feedback is restored, recovery occurs within one polling sample (<1.3 s resolution); the actual PI recovery is sub-second.

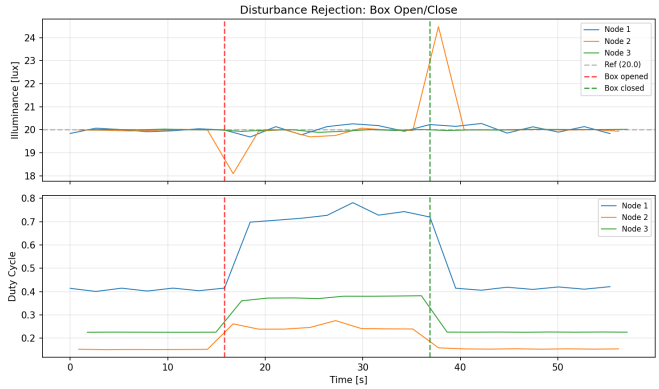

Figure 11: Physical disturbance: box opened (red) and closed (green).

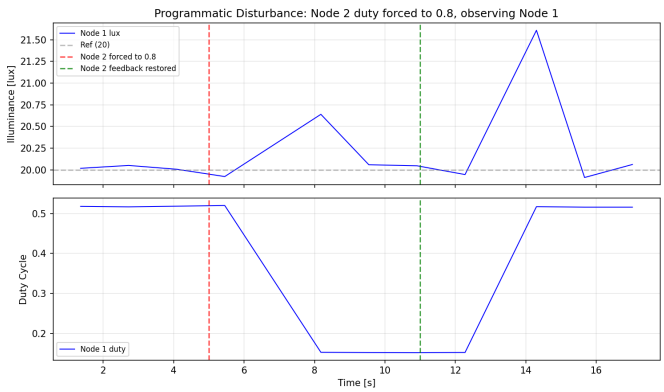

Figure 12: Programmatic disturbance: Node 2 forced to 0.8, Node 1 compensates.

8 Conclusions

The system achieves all Phase 2 objectives: 500 kbps CAN communication, hub-based PC control, deterministic wake-up, automated calibration ($\sim$4.2 s), and distributed cooperative control. The PI controller with feedforward provides sub-100 ms reference tracking and effective disturbance rejection. Three optimisation algorithms were implemented and validated: with equal costs all converge to the same feasible point; with unequal costs, redistribution is limited by the weak physical cross-coupling (each LED dominates its own sensor by 7–70$\times$). Key design choices include: (i) Core 1 exclusively for CAN, eliminating SPI contention; (ii) feedforward initialisation for single-cycle tracking; (iii) CAN-broadcast calibration plans for deterministic synchronisation; (iv) full-constraint checking in the local optimisation, where each node considers all peers' illuminance requirements.